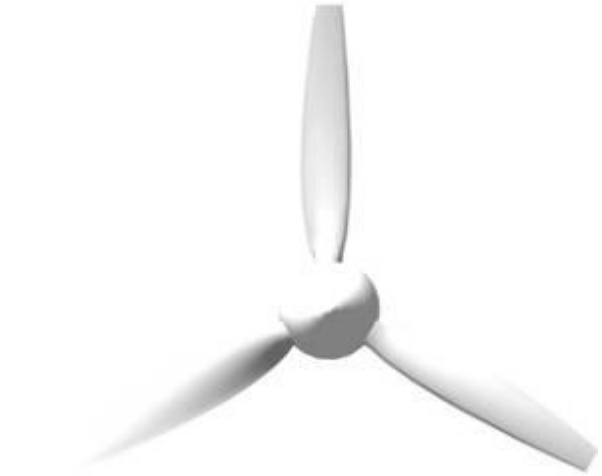

mt-propeller

ATA 61-07-19
(E-3719)

OPERATION- AND INSTALLATION AND MAINTENANCE MANUAL

REVERSIBLE HYDRAULICALLY CONTROLLED
VARIABLE PITCH PROPELLER

MTV-28-2-( )-R(H)

Revision 7

Release date: August 27th, 2026

DE.21G.0008
EASA.21J.020

Warning

People who operate a hovercraft should recognize that various types of risks are involved; and they should take all precautions to minimize them, since they cannot be eliminated entirely. The propeller is a vital component of the hovercraft. A mechanical failure could cause a failure in operation or create vibrations sufficiently severe to damage the hovercraft.

Propellers are subject to constant vibration stresses from the engine and airstream, which are added to high bending and centrifugal stresses.

Before a propeller is classified as being safe to operate, an adequate margin of safety must be demonstrated. Even though every precaution is taken in the design and manufacture of a propeller, history has revealed rare instances of failures, particularly of the fatigue type.

It is essential that the propeller be properly maintained according to the recommended service procedures and a close watch be exercised to detect impending problems before they become serious. Any grease leakage or oil leakage, unusual vibration, or unusual operation should be investigated and repaired as it could be a warning that something serious is wrong.

As a fellow pilot, I urge you to read this manual thoroughly; it contains a wealth of information about your new propeller.

The propeller is among the most reliable components of your hovercraft. It is also among the most critical to operation safety. It therefore deserves the care and maintenance called for in this manual. Please give it your attention, especially the section dealing with inspections and checks.

Thank you for choosing a MT-Propeller. Properly maintained it will give you many years of reliable service.

Gerd R. Mühlbauer
President
MT-Propeller Entwicklung GmbH

OPERATION AND INSTALLATION MANUAL

FOR

REVERSIBLE HYDRAULICALLY CONTROLLED VARIABLE PITCH PROPELLER

MTV-28-2-AZ-R(H)

Table of contents

Table of contents 2
List of effective pages 3
List of revisions 4
1. General 6
2. Model designation 10
3. Typical Blade Design 11
4. Design and operation information 12
5. Installation and operation instruction 19
6. Inspections 30
7. Maintenance 37
8. Trouble shooting 43
9. Shipping and storage 45
10. Special tools 46
11. Part List 46
12. Propeller drawing 47

LIST OF EFFECTIVE PAGES

Page	Date	Page	Date	Page	Date
1	2020-12-10	20-1	2025-10-30	40	2022-10-05
2	2020-12-10	21	2020-12-10	41	2020-12-10
3	2026-08-27	22	2023-10-05	42	2025-10-30
4	2026-08-27	23	2021-01-25		
5	2020-12-10	23-1	2021-01-25		
6	2020-12-10	24	2020-12-10		
7	2020-12-10	25	2020-12-10		
8	2020-12-10	26	2021-08-13		
9	2020-12-10	27	2023-10-05		
10	2020-12-10	28	2020-12-10		
11	2020-12-10	29	2020-12-10		
12	2020-12-10	30	2020-12-10		
13	2023-10-05	31	2020-12-10		
13-1	2022-10-05	32	2020-12-10		
14	2021-01-25	33	2020-12-10		
14-1	2021-01-25	34	2020-12-10		
15	2020-12-10	35	2020-12-10		
16	2020-12-10	36	2020-12-10		
17	2020-12-10	37	2020-12-10		
18	2023-10-05	37-1	2026-08-27		
19	2023-10-05	38	2020-12-10		
20	2025-10-30	39	2020-12-10		

LIST OF REVISIONS

Revision No	Revision Date	Pages	Description
0	2020-12-10	All pages	Initial Revision
1	2021-01-25	3, 4, 13, 14, 14-1, 23, 23-1;	Safety Instructions added
2	2021-08-13	3, 4, 26;	Inspections
3	2022-10-05	3, 4, 13, 13-1, 40;	Spinner information, Shipping Instructions
4	2023-05-10	3, 4, 18, 19, 37-1;	Repainting Instructions
5	2023-10-05	3, 4, 13, 18, 19, 22, 27, 42	Spinner, Installation of in-field removable blades MTV-28 Drawing
6	2025-10-30	3, 4, 20, 20-1, 42;	Description of installation of anti-rotation pin improved, Drawing updated.
7	2026-08-27	3, 4, 37-1	Additional Information and pictures added

MT-Propeller Important Information

Every owner should stay in close contact with his MT-Propeller dealer or distributor and authorized MT-Propeller service shop to obtain the latest information pertaining his propeller and its installation.

MT-Propeller takes a continuing interest in having the owner get the most efficient use of his propeller and keeping it in the best mechanical condition.

Consequently, MT-Propeller from time to time issues Service Bulletins, Service Letters and manuals relating to the propeller and its installation.

Service Bulletins are of special importance and should be complied promptly.

These are sent to dealers, distributors and latest registered owners. Service Letters deal with products improvements and service hints pertaining to the propeller and its installation. Occasionally they also are sent in case of need to latest registered owners.

If an owner is not having his propeller serviced by an authorized MT-Propeller service shop or MT-Propeller USA or MT-Propeller Germany, he periodically should check with a MT-Propeller dealer or distributor (see MT-Propeller`s homepage to find out the latest information) to keep his propeller up to date.

The list of valid MT-Propeller manuals, Service Bulletins, AD´s and their latest revisions can be downloaded from the MT-Propeller homepage (www.mt-propeller.com).

Hardcopies can also be obtained from MT-Propeller Germany and MT-Propeller USA.

1. GENERAL

1.1. Statement of purpose

This publication provides operation, installation and line maintenance information for the MT hydraulically variable pitch propeller with dual acting system and reverse.

In addition to the propeller assembly, the propeller governing (beta tube) system is addressed in this manual.

Installation, removal, operation and troubleshooting data is included in this publication.
Also the hovercraft manufacturer's manuals should be used in addition to this information.

1.2. Additional Available Publications

In addition to this manual the following applicable publications should be used for repair and overhaul:

OVERHAUL MANUAL ATA-61-12-392 / E-2392

Consult the manufacturer’s manuals for the propeller governor and de-icing
(see vendor publications).

For MT-Propeller service literature contact:

MT-Propeller Entwicklung GmbH
Flugplatzstraße 1
D-94348 Atting
Germany

Tel.: +49-9429-9409-0
Fax: +49-9429-8432

E-mail: sales@mt-propeller.com
Internet: www.mt-propeller.com

1.3. Abbreviations

TBO	Time Between Overhaul
TT	Total Time
TSO	Time Since Overhaul
RPM	Revolutions per Minute
SAE	Society of Automotive Engineers
UNF	Unified National Fine Thread Series
TCDS	Type Certificate Data Sheet
PU	Polyurethane
MAP	Manifold Pressure
AFM	Airplane Flight Manual
IPS	Inch per Second
FAA	Federal Aviation Administration
ICA	Instruction for Continued Airworthiness
TSN	Time Since New
STC	Supplement Type Certificate

NOTE: **TSN/TSO IS CONSIDERED AS THE TIME ACCUMULATED BETWEEN AIRCRAFT LIFT OFF AND AIRCRAFT TOUCHDOWN, I.E., FLIGHT TIME.**

1.4. Terms and Definitions

Blade Angle	Measurement of blade airfoil location described by propeller rotation
Constant Speed	A propeller system which employs a governing device to maintain a selected engine RPM
Crack	Irregularly shaped separation within a material, sometimes visible as a narrow opening at the surface
Delamination	Internal separation of layers of a composite material
Erosion	Gradual wearing away or deterioration due to action of the elements
Feathering	A propeller with blades that may be positioned parallel to the relative wind, thus reducing aerodynamic drag
Overhaul	The periodic disassembly, inspection, repair, refinish and reassembly of a propeller assembly to maintain airworthiness
Overspeed	Condition in which the RPM of the propeller or engine exceeds predetermined maximum limits; the condition in which the engine or propeller RPM is higher than the RPM selected by the pilot through the propeller control lever
Pitch	Same as “Blade Angle”
Windmilling	The rotation of an aircraft propeller caused by air flowing through it while the engine is not producing power.

1.5. Definition of Component Life and Service

1.5.1. Overhaul

Overhaul is a periodic process and contains the following items:

- Disassembly
- Inspection of Parts
- Reconditioning of Parts
- Reassembly

The overhaul interval is based on hours of service (operating time) or on calendar time.

Attention:
In case of blade damage by a foreign object an overhaul is always required in case that the blade damage is beyond the limitation of an in-field repair.

A non-rotating propeller FOD does not require an overhaul; it only needs a blade repair or a blade exchange.

Blade damage with a non-rotating propeller cannot damage the propeller hub and therefore does not require an overhaul.

At such specified periods, the propeller assembly should be completely disassembled and inspected for cracks, wear, corrosion and other unusual or abnormal conditions. As specified, certain parts should be refinished, and certain other parts should be replaced.

Overhaul is to be accomplished in accordance with the latest revision of the overhaul manual ATA 61-12-392 (E-2392).

The overhaul interval for the propellers (TBO) is shown in *Service Bulletin No. 1-1* (latest issue).

1.5.2. Repair

Repair is correction of minor damage caused during normal operation.
It is done on an irregular basis, as required.
See Service Letters SL32 and SL32-2, each latest issue for additional information.

A repair does not include an overhaul.

Amount, degree and extent of damage determines whether or not a propeller can be repaired without overhaul.

Attention:
In case of blade damage by a foreign object an overhaul is always required in case that the blade damage is beyond the limitation of an in-field repair.

A non-rotating propeller FOD does not require an overhaul, it only needs a blade repair or a blade exchange.

Blade damage with a non-rotating propeller cannot damage the propeller hub and therefore does not require an overhaul.

1.5.3. Component Life

Component life is expressed in terms of total hours of service (TSN: Time Since New) and in terms of hours of service since overhaul (TSO: Time Since Overhaul).

Both references are necessary in defining the life of the component. Occasionally a part may be "life limited", which means that it must be replaced after a specified period of use. Life limited parts are listed in Overhaul Manual No. ATA 61-12-392 (E-2392).

Overhaul returns the component or assembly to zero hours TSO (Time Since Overhaul), but not to zero hours TT (Total Time).

1.6. Reversible propellers

Reversible propellers with blade angle feedback are used primarily for Hovercraft- and Airship Installations, but not limited to those installations.
Mechanical stops are full forward and full reverse.

Natural composite blades with fiber reinforced Epoxy cover and metal leading edge protection are used to minimize weight at the highest amount of safety against fatigue fractures due to vibrations.

2. MODEL DESIGNATION

2.1. Hub-designation

MT	V	-	28	-	2	-	AZ	-	()	-	( )	-	R	(H)	( )
1	**2**		**3**		**4**		**5**		**6**		**7**		**8**	**9**	**10**

10: Capital letter = Modifications which restrict or exclude interchangeability
Small letter = Modifications which not affecting interchangeability.

9: (H) = Reverse System Hovercraft

8: R = Reversing System installed

7: F = Feathering System installed

6: Letter Designation Counterweights
C = Counterweights mounted for pitch change moments towards high pitch / feathering

5: Code for Propeller Flange
AZ = PCD 230,00 mm, 18 bolts 9/16''-18 UNF bolts + 2 Ø 16 mm pins (engine side)
PCD 200,00 mm, 18 bolts 1/2''-20 UNF bolts (actuator side)

4: Consecutive Number of Series

3: Consecutive Number of Basic Type

2: Variable Pitch Propeller

1: MT – Propeller Manufacturer

2.2. **Blade Designation**

CR	RD	358	-	160	( )
1	**2**	**3**		**4**	**5**

5: Small Letter = Modifications which do not affect interchangeability of blade sets.
Capital Letter = Modifications which restrict or exclude interchangeability of blade sets.

4: Consecutive Number of Basic Type (including Aerodynamic Design

3: Diameter in cm

2: Sense of Rotation
Blank = Right Hand Tractor
RD = Right Hand Pusher
L = Left Hand Tractor
LD = Left Hand Pusher

1: Position of Actuation Pin
C = Pitch Change Pin for Pitching Moment Towards High Pitch
CF = Pitch Change Pin for Feathering, Pitching Moment Towards High Pitch
CR = Pitch Change Pin for Reversing, Pitching Moment Towards High Pitch
CFR = Pitch Change Pin for Feathering, Reversing, Pitching Moments Towards High Pitch

The complete propeller designation is a combination of both designations:
MTV-28-2-AZ-R(H) / CRRD358-160.

The hub-serial number starts with the year of manufacture.
All records of the propeller are registered in respect to this number.

The propeller for the Hovercraft engine combination is always defined according the hub-, blade- and spinner combination. For the actual blade settings, depending on the Hovercraft model, the propeller-logbook must be considered.

3. TYPICAL BLADE DESIGN

Figure 1 shows the typical layout of a natural composite blade covered with carbon fiber.

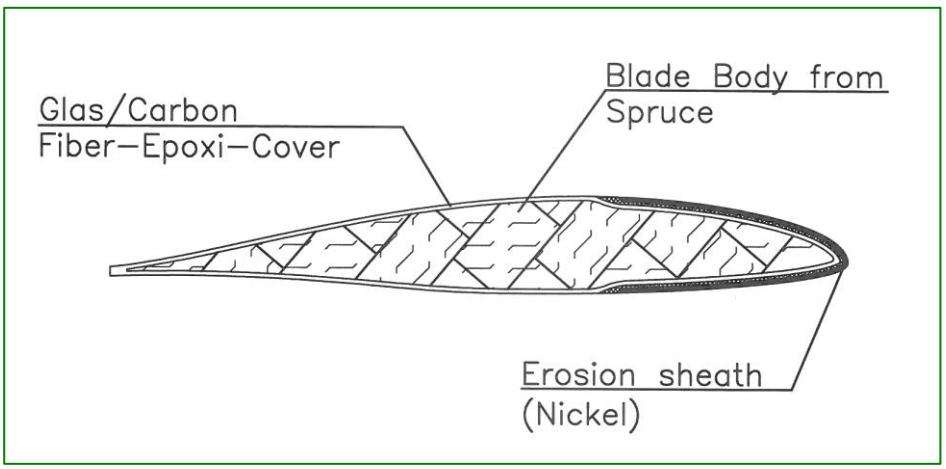

Figure 1: Typical natural composite blade

4. DESIGN AND OPERATION INFORMATION

The variable pitch propeller consists of the following main groups:

- Hub
- Pitch Change Mechanism
- Blades
- Counterweights
- Spinner
- Beta Valve

4.1. Hub

The one-piece hub is made from forged and milled aluminum alloy with the outer surface shot-peened and anodized. The blade bearings are special designed ball bearings, whereas the balls act as split retainers in order to hold the blades / outer blade ferrules in the hub, creating an increased safety factor against blade loss. The outer bearing race is a one-piece part and pressed into the hub, while the inner race is split and installed on the outer blade ferrule. Outer blade ferrule and bearing are held in the hub by a preload nut secured with safety plates. The preload nut can only be installed in the manufacturing plant or certified overhaul service stations.
The blade is screwed with the inner blade ferrule into the outer blade ferrule and secured with the blade clamp and safety pin. Thus, the blades can be removed in-field for better repair, replacement or shipping.

The inner part of the hub is filled with oil, on the front is the dual acting cylinder mounted for the pressure oil; this arrangement allows a simple and lightweight design. The spinner front plate is used for the installation of balance weights.

Attention:
The studs 2.43 on the drive shaft side are pressed into the hub from the inside. Therefore, never place the hub onto these studs on the drive shaft side since the studs would fall back into the hub and cause the oil to spill out of the hub. A disassembly of the hub and an oil refill would be required.
The hub can be placed onto the stub shaft side safely since these studs are screwed into the hub and thus cannot fall into the hub.

4.2. Pitch Change Mechanism

The pitch change mechanism of the blades is obtained with an eccentric pin on the outer blade ferrule. A brass block connects the blade with the piston and front piece; thus, the axial movement of the piston rotates the blades.
The piston is controlled by oil pressure applied through the beta tube.
The piston's movement range from full forward to full reverse is limited by mechanical high pitch stop and low pitch stop.

High pitch stop and reverse stop can be adjusted in the manufacturing plant.

4.3. **Blade**

The used blades are of natural composite design, using high compressed wood in the root and lightweight wood in the remaining body. Three foam inserts are installed per blade.
Carbon fiber material covers the entire blade surface and is painted with epoxy/polyurethane lacquer.
The outer section is protected against erosion by a bonded nickel erosion sheath.
The length of the nickel erosion sheath is 830 mm (32.7 in); the inner section of the blade is protected by a special PU boot.

The inner blade ferrule is installed with special lag screws to the wooden blade root and is additionally bonded with epoxy resin.

4.4. **Counterweights**

The propeller is equipped with counterweights on the blade clamps.
Pitching moment is towards low/reverse pitch.

4.5. **Spinner**

The spinner dome is a five-piece part made from fiber reinforced composite.
The pieces are assembled by stabilization plates and screws.

Spinner rear support plate and the mid-support-plate are parts of the hub. The spinner front support (dome) is mounted to the drive shaft adapter. The dome is mounted on the supports by means of screws.

It is vital that all fastenings, flanges and seals can be inspected for integrity and leaks during set to work, harbor trials, sea trials and up to the first TBO, meaning the following items must not be fitted during installation (see section 12, Drawing No. P-1582).

- 3.1 Spinner Dome
- 3.11 Mid Bulkhead
- 3.2 Front Bulkhead
- 3.3 Rear Bulkhead
- Fixed Cowl ,which is fitted to the duct and referenced in the bearing cartridge drawings.

Access to the hub is also required for the propeller vibration survey.

4.6. **Propeller pitch actuator**

The electric pitch actuator offers the possibility of a direct blade angle feedback from full forward to full reverse blade pitch.
It is connected to a pressure line (30 bars / 435 PSI; pump capacity approx. 40 l/min / 42 qts/min) and a drain line.

Set pitch to zero before the engine is shut down, that you have the propeller blade at the correct blade angle for the next engine start.

This pressure results in an adjustment force of the beta tube of 40 - 60 N (9 - 13.5 lbs), a brake away force in the end positions of approximately 120 N (27 lbs) and a leakage of max. 3.6 qts/min, depending on oil viscosity.

Attention:
If more pressure is used the friction will increase resulting into a higher force to push / pull the beta tube.

WARNING:
DO NOT OPERATE THE PITCH CONTROL LEVERS WITHOUT HYDRAULIC PRESSURE AS THE PROPELLER HUB OR THE BETA ROD MAY BE DAMAGED.

WARNING:
MAX 0.2 BACK PRESSURE IS ALLOWED IN THE DRAIN LINE. IN CASE OF QUESTION MEASURE THE BACK PRESSURE IN THE RETURN LINE!

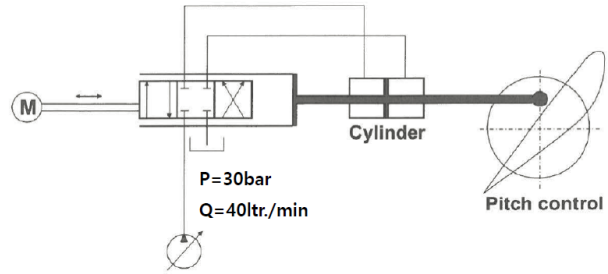

Interface requirements:

- Operating Pressure ..... : 30bar
- Max. design pressure ..... : 40bar
- Oil flow required (for 15deg/sec pitch change rate) ..... : 40l/min

Figure 2: Hydraulic unit schematic drawing

The pressure line is on top of the beta rod P-1587-X, on the drain line the actuator mount assembly is located.
An electrical push/pull actuator is connected to the beta tube, which provides a direct blade angle feedback in operation.

The maximum travel of the beta rod is 73 mm (2.87 in) from full forward to full reverse.

4.7. Beta rod

The beta rod is made out of 3 single elements and needs to have a full concentric run, no wobble is allowed.

The angular tolerance between the two interfaces (rotor side, hydraulic actuator side) must be 0.05°.

The alignments tolerances must be 0.2 mm (0.008 in)

If the distance between the engine / propeller drive shaft to the adjusting unit is more than 500 mm (19.7 in) the beta rod must be additionally guided in the drive shaft by a composite guide.

Attention:
In case the beta rod is unguided or has excessive wobble, it may fail during operation which results in an uncontrolled propeller.

WARNING:
DO NOT OPERATE THE PITCH CONTROL LEVERS WITHOUT HYDRAULIC PRESSURE AS THE PROPELLER HUB OR THE BETA ROD MAY BE DAMAGED.

4.8. Oil system to be used

For a good dynamic response of the propeller it is recommended to supply the adjusting unit and the beta tube with the following mineral oil based hydraulic oil:

HLP-10 according to DIN 51 519 and DIN 51 524 Part 2
EXXON Univis HVI 13
or individually approved oils by MT-Propeller.

mt-propeller

Drawing MTV-28-2-AZ-R(H) P-1582-1

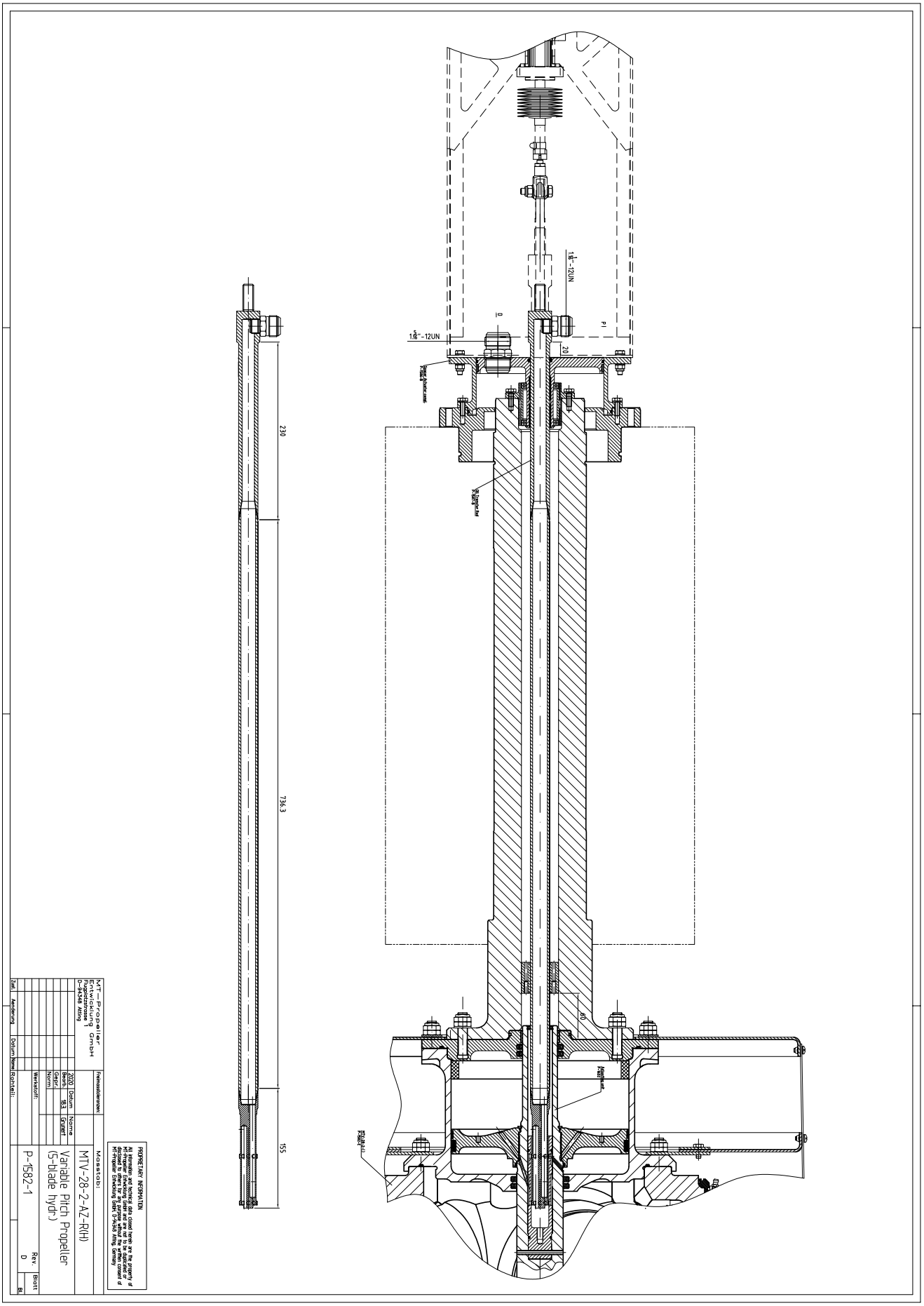

mt-propeller

Drawing Beta rod P-1587-X

Quan.	Pos.	Description	Drawing/DIN No.	Remark
1	1.1	Adapter	A-1409-7-A-230	
1	1.2	Beta Tube	A-1409-6-X	
1	1.3	Tube hardened	A-1411-7-A-R	
1	1.4	Fitting	GE 0 08 HJ 12	

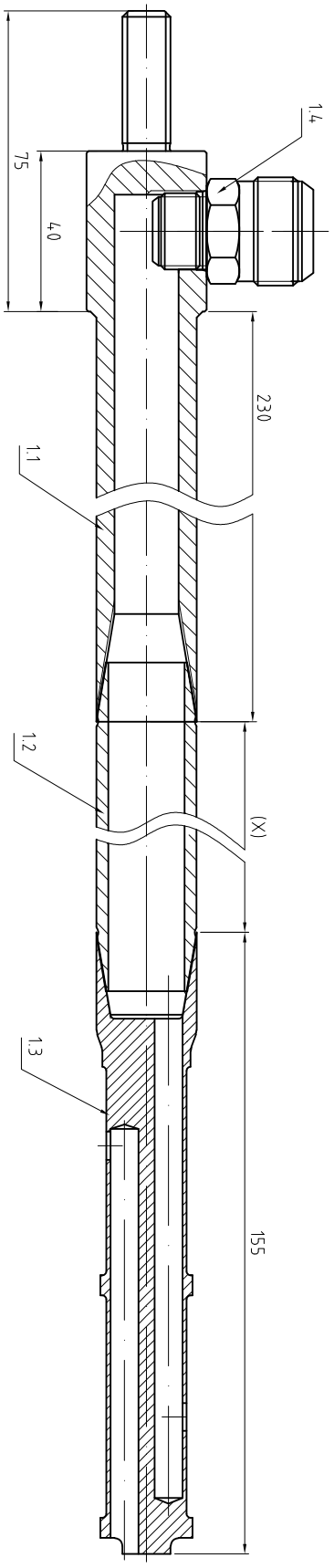

PROPRIETARY INFORMATION

All information and technical data closed herein are the property of MT-Propeller Entwicklung GmbH and are not to be duplicated or disclosed to others for any purpose without the written consent of MT-Propeller Entwicklung GmbH, D-94348 Atting, Germany

MT—Propeller Entwicklung GmbH
Propellerplatz 1
D—94348 Atting

Freimasstoleranzen: ± 0,2 mm
Gewicht:
Masstab: 1:1

	Name	Datum
2017		
Bearb.	3105.	Grum
Gepr.		
Norm		
Werkstoff:		

MTV-28-( )

Beta Rod compl.

P-1587-B-X

Rev. B

Blatt Bl.

Zust.	Aenderung	Datum	Name
B	aktu.	06.03.20	D.G
A	div. aenderungen	08.05.19	D.G

Rohteil:

5. INSTALLATION AND OPERATION INSTRUCTION

5.1. General

The MTV-28-2-AZ-R(H) is designed only suitable for an engine flange with 18x 9/16”-18 UNF on a Ø230 mm PCD interface. The code for the flange type and size can be seen from the model designation (see chapter 2).

5.2. Clean propeller and engine flange with solvent or gasoline. Both surfaces must be dry and clean before installation. Remove all surface defects.

WARNING:
DO NOT INSTALL AN ADDITIONAL O-RING ON ENGINE FLANGE.

5.3. Grease on blade surface

The first run-up of a new or overhauled propeller may leave grease on the blades and inner surface of the spinner dome.
This is normal and does not imply a continuing grease leakage.
Remove any grease on the blades or inner surface of the spinner dome by using a mild solvent.
Minor grease leak which can be seen on one or all blade root(s) and spinner should be monitored if the situation gets worse.
If the grease leak does not spray more than 180 mm (7 in) on the blade surface measured from the blade root outside the blade ferrule in 5 hours of operation, it is defined as minor and should be only monitored.
Continued grease leakage after 20 hours of operation from first leakage requires repair at an authorized service repair facility within 5 operating hours

In case of doubt contact manufacturer.

5.3.1. Installation of in-field removable blades

Warning:
Never polish the outer diameter on the inner blade ferrule or the inner diameter on the outer blade ferrule since the surfaces are special treated for durability, see Figure 3.
If polished, the surface is losing the hardness and may create fretting.
Only clean ferrule surfaces with a clean towel.

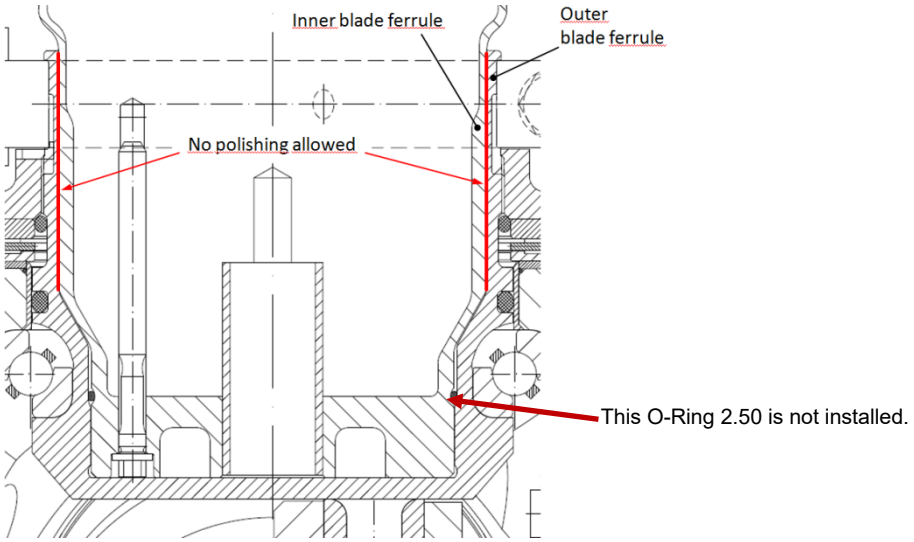

Figure 3: No polishing allowed on contact surfaces

Loosen the stop nut 6.3 on the counterweight clamp screw 6.1.
Do not install the O-ring 2.50 in the groove on the inner ferrule shank (see Figure 4).
No O-ring is used on the latest versions, from the inner to the outer ferrule.
Lubricate the ferrule thread (see Figure 4 and 4a) only with PTFE dry lubrication spray, no grease or oil is used on the thread.
Check carefully that the inner ferrule 1.2 and outer ferrule 2.53 are cleaned and grease – as well as PTFE free, except the threads.
see Figure 6 and Figure 7. Check that there are no damages on the threads of the ferrules.

Attention:
In case that metal chips or other impurities are present on the threads fretting can occur during blade installation and the ferrules may be scrapped.
Clean the threads thoroughly, e.g. with a brass brush

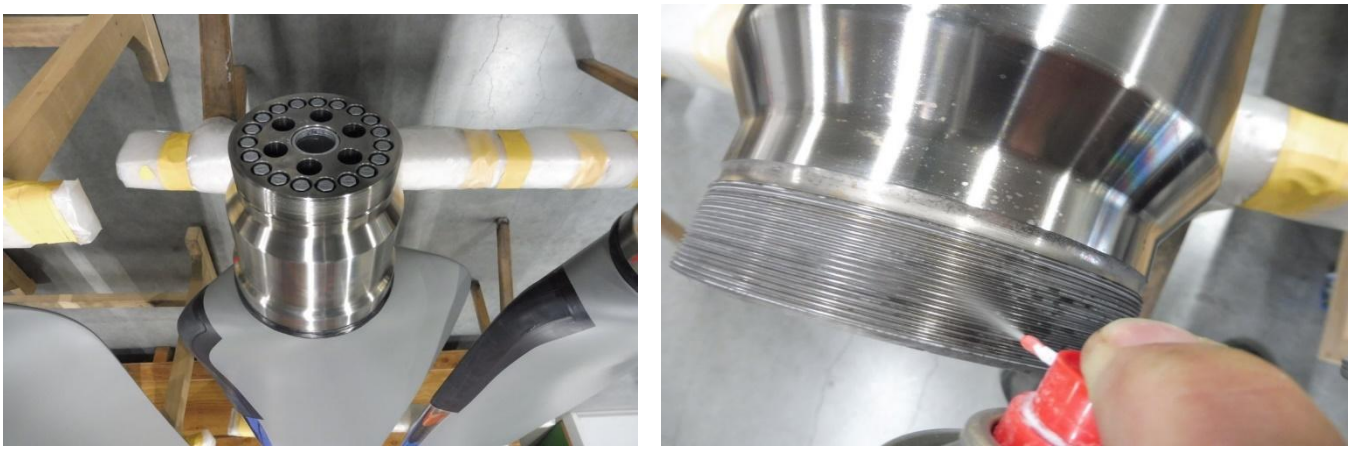

Figure 4 / 4a: Lubricate the thread on the blade ferrule only with PTFE dry lubrication

Figure 5: **Lubricate inner thread with PTFE dry lubrication spray**

Figure 6: **Cleaned and degreased surfaces, used for clamping for the friction to fix the inner blade in the outer blade ferrule**

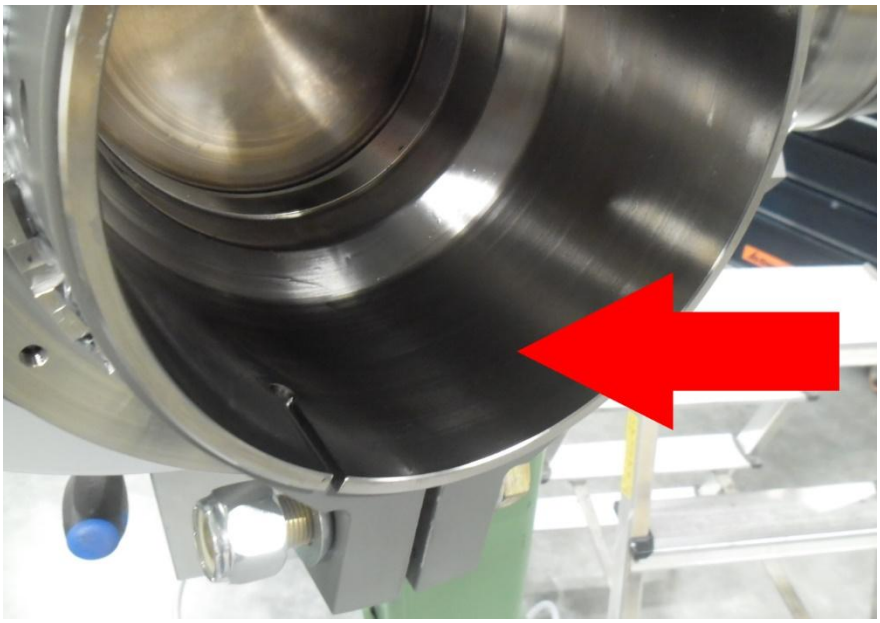

Figure 7: **Cleaned surface, <u>no polishing allowed, no greasing allowed!</u>**

WARNING:
DO NOT GREASE THE CYLINDER BLADE FERRULE OUTER/INNER DIAMETER, OTHERWISE THE FRICTION WILL NOT BE HIGH ENOUGH TO STOP THE BLADE FROM ROTATION DURING OPERATION.

Screw the blade with the thread of the inner ferrule completely into the outer blade ferrule (CW); 2 mechanics are required. One person needs to lift the blade up against its own weight for easy screwing it into the outer ferrule.
Afterwards rotate the blade carefully out (CCW) again until the marked positions on the blade shank and outer blade ferrule are aligned. The bore and the anti-rotation pin 6.9 should then be aligned.

Attention:
The installation of the blade requires at least 2 persons due to the size of the blade.
Use great care when screwing the blade with its inner ferrule into the outer ferrule and **do not use force**. In case you encounter resistance during the screwing motion **do not try to force the inner ferrule into the outer ferrule**. Screw the blade out again, check the tread for possible damage and clean the thread; then retry.
Further the blade works as a resonance body. **Listen carefully for abnormal sounds** during the installation of the blade into the outer ferrule. In case any odd sounds appear screw the blade out, check the thread for possible damage and clean the thread, then retry.
If not respecting this the fine thread M145x1,5 of inner and/or outer ferrule can be damaged and both inner and outer ferrules may be scrapped.

Figure 8: Installation of the blade only with two mechanics

Apply silicone RTV 109 onto the bore surface, approx. 5 mm (0.2 in) from the edge before installing the anti-rotation pin. In that way moisture is prevented to intrude into the pin bore during operation.
Punch the anti-rotation pin with a soft hammer into the bore until it cannot be driven any further.

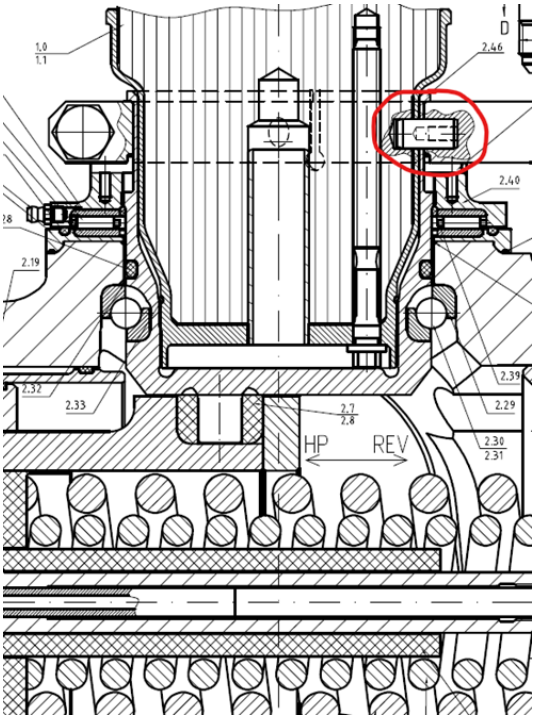

Attention:
Do not use too much force to drive in the pin in order not to damage the ferrule.

Check that the pin is punched in deep enough and has a tight seat – it should no longer be able to be moved by hand – to act as the anti-rotation pin between blade, outer ferrule and counterweight.

Wipe off the excess silicon after the pin installation.

On the blade clamp there are 5 possible pin positions marked with characters A B C D E.
One position is used to punch in one anti rotation.

In case the blades are replaced by a new blade, a different pin position can be used to set the correct blade angle. Contact manufacturer for guidance of drilling pin positions

Attention:
After drilling a new pin bore the edge of the bore in the inner blade ferrule needs to be de-burred before rotating the blade out from the outer ferrule. To do so rotate the blade slightly and carefully CW and CCW in order to get access to the bore edge of the inner blade ferrule. Fretting can occur and the outer blade ferrule can be damaged if the blade is screwed without de-burring the bore edge first.
The bore shall not be drilled more than 10mm (0.4 in) into the wooden part of the blade.

Record the pin position used for each blade in accordance to the hub serial number.
Tighten the stop nut 6.3 of the clamp screw 6.1 with 210 - 220 N (155 - 162 ft lbs) of torque, after the anti-rotation pin is punched in.
Optionally seal the pin positions which are not used with silicone RTV 109 or similar according to Figure 9 to prevent dirt intrusion.

Figure 9: Seal the unused bores with silicone RTV 109

Also seal the accessible contact line between inner and outer ferrule as well as the contact line between blade clamp and outer ferrule. Apply each a silicone beading of approx. 0.4 in (10 mm) in width in order to avoid moisture intrusion between the ferrules, see Figure 10.

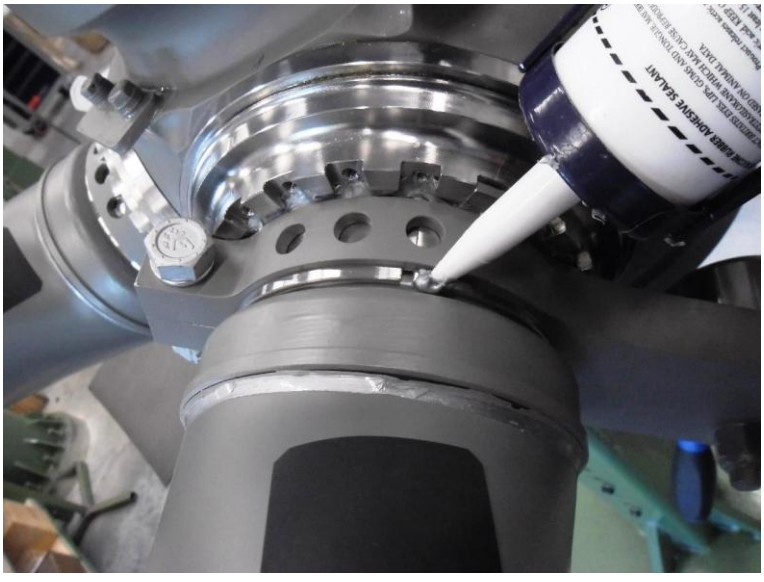

Figure 10: Seal contact lines with a 10 mm (0.4 in) wide bead

Apply silicone seal RTV 109 or similar onto the contact line between blade clamp and preload nut, see Figure 11.

Finally apply sealant on the bolt and stop nut which attach the counterweight to the blade clamp.

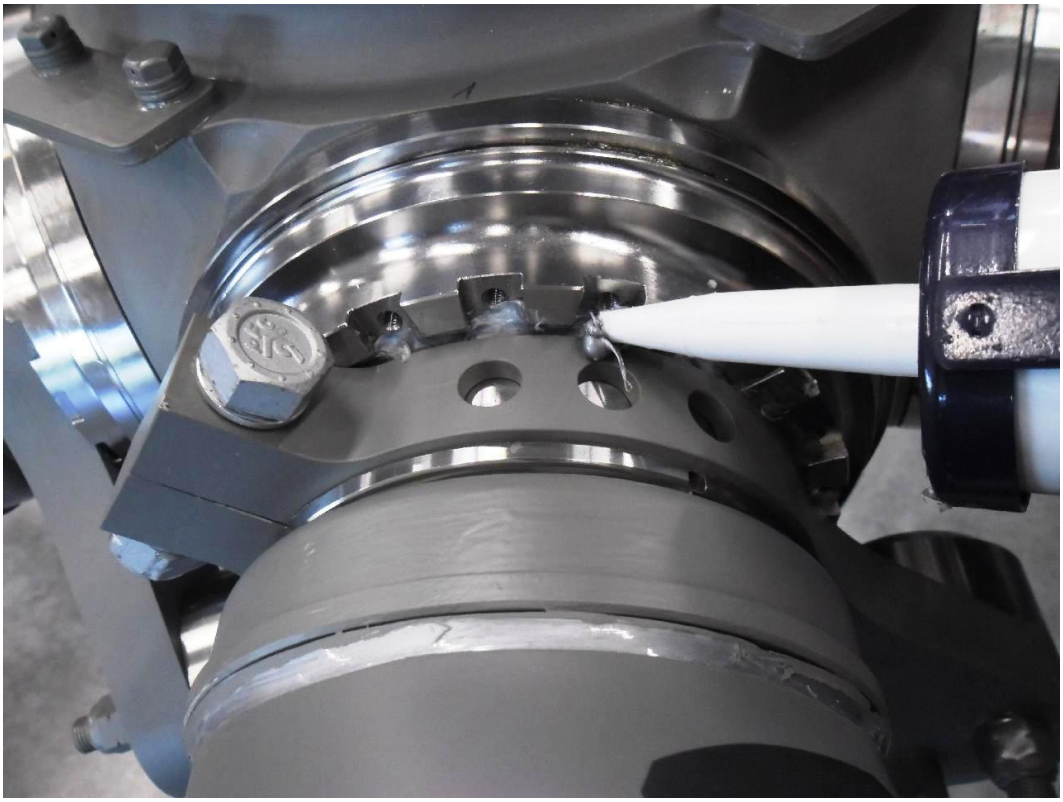

Figure 11: Apply silicone between blade clamp and preload nut

5.4. Installation of the propeller and the beta tube

5.4.1. The Hovercraft manufacturer's documentation for the installation of the propeller on the stub shaft and drive shaft should be followed.
MT-Propeller will give a general guidance for the installation based on similar installations.

Install the spinner dome before the propeller will be mounted on the stub flange shaft.

Attention:
The propeller, with grease, oil and blades installed has a weight of 398.5 kg. When handling the propeller with a soft sling, make sure the soft sling is positioned on the propeller blades to avoid high pressure loads on small surfaces to damage the blades.

The sub shaft cartridge assembly is pre-installed on the Hovercraft structure.
The propeller is fixed on slings with a crane and controlled by minimum 2 people that during installation it can be correctly aligned with the sub shaft bores.

WARNING:
NEVER USE THE STOP NUTS 2.16 TO PULL THE PROPELLER ONTO THE SUB SHAFT FLANGE!
CHECK FOR O-RING 2.65 TO BE IN POSITION ON THE PROPELLER. DO NOT DAMAGE THE O-RING. BEFORE INSTALLATION, MAKE SURE THE FLANGE CONTACT SURFACES ARE CLEANED FROM ANY OIL OR GREASE. BY THIS IT IS ENSURED, THAT THE LOADS ARE TRANSFERRED BY FRICTION.

Alignment Warning:
Correct alignment between all components in the propeller system is valid for safety, component longevity and correct function. Alignment must be achieved in the static 'installation' condition, and maintained in the dynamic 'craft underway' condition. Alignment reports must be reviewed before any set to work or trials can begin.

The propeller drive shaft, propeller and bearing cartridge must be installed such that the alignments between the drive shaft and the propeller are within the tolerances stated on Altra Motion drawing 74447-10. This alignment tolerance must be maintained in both the static (installation) and the dynamic (craft underway) conditions.

Failure to maintain this alignment may overstress the gearbox stub shaft, the propeller drive shaft, the propeller hub, propeller stub shaft and bearings and may lead to catastrophic failure of these components.

COUPLING MISALIGNMENT CAPABILITIES	
MAX ANGULAR	0.2° @ 1.4 mm AXIAL
MAX AXIAL	2.9 mm @ 0° ANGULAR
MAX PARALLEL	12 mm

With the propeller installed on the sub shaft flange, continue to support the weight of the propeller with the soft slings and the crane, otherwise damage to the bearings in the stub flange cartridge may occur, based on the weight of the propeller and drive shaft.

Put the spinner front plate 3.2 on the drive shaft, because after installation, there is no access anymore to install the front plate.

Install the drive shaft with the adapter flange on the propeller hub studs 2.43. Observe the position of the 2 index pins 2.46 for the drive shaft.

Attention

Never use the stop nuts 2.45 to pull the propeller onto the flange!
Manual pushing only!
Disrespecting this can damage the hub and / or sheared off metal chips can cause oil leakage through the O-ring!

The studs 2.43 on the drive shaft side are pressed into the hub from the inside. Therefore, never place the hub onto these studs on the drive shaft side since the studs would fall back into the hub and cause the oil to spill out of the hub. A disassembly of the hub and an oil refill would be required.
The hub can be placed onto the stub shaft side safely since these studs are screwed into the hub and thus cannot fall into the hub.

Before installation, make sure the flange contact surfaces are cleaned from any oil or grease.

Stop nuts with washers should be tightened crosswise with equal moment.

Torque the 9/16”-18 UNF stop nuts ungreased with 135 - 150 Nm (100 - 110 ft lbs)
Torque the 1/2’’-20 UNF stop nuts ungreased with 110 - 115 Nm (81 – 85 ft lbs)
Note:
Torque values are valid for dry, free-moving threads only.

After the drive shaft is installed and the stop nuts ½’’ -20 UNF from the stub shaft flange as well as the stop nuts 9/16’’ -18 UNF are torqued, the slings supporting the propeller can be removed.

5.4.2. Installation of the spacer actuator:
Install O-Ring 2.8 into the piston bore groove and install O-Ring 2.2 and support ring 2.3 onto the piston outer surface. Use washers 2.7 and screws 2.4 to install the pre-assembled spacer actuator onto the stub shaft; torque all screws with 8.2 - 9.4 Nm (6 - 6.9 ft lbs).

Install O-Ring 2.1 onto the housing 1.1 and mount it onto the cartridge aft end cap; torque all screws with 8.2 - 9.4 Nm (6 - 6.9 ft lbs).

Secure all screws with safety wire.

After assembly of the spacer actuator insert the beta rod into the piston.

Attention:
Take care not to damage the sealing or the friction bearing.

5.4.3. Install spinner with screws 3.8 and plastic washers 3.7
and apply a torque of 4 – 5 Nm (35.4 - 44.3 in lbs). Observe mating marks.

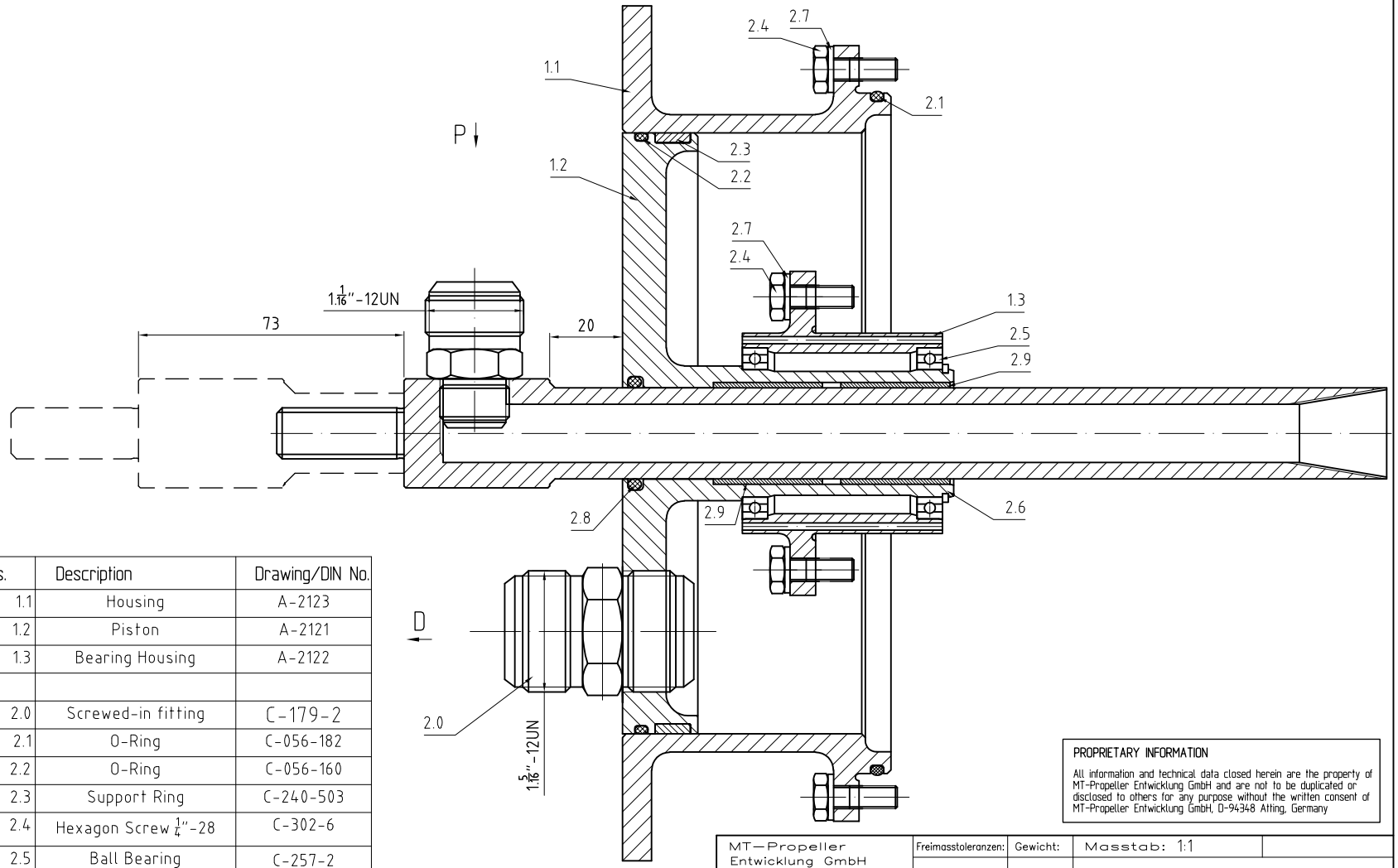

Quan.	Pos.	Description	Drawing/DIN No.
1	1.1	Housing	A-2123
1	1.2	Piston	A-2121
1	1.3	Bearing Housing	A-2122
1	2.0	Screwed-in fitting	C-179-2
1	2.1	O-Ring	C-056-182
1	2.2	O-Ring	C-056-160
1	2.3	Support Ring	C-240-503
16	2.4	Hexagon Screw 1/4"-28	C-302-6
2	2.5	Ball Bearing	C-257-2
1	2.6	Safety Ring	C-215-2-9
16	2.7	Washer	C-336-5
1	2.8	O-Ring	C-050-30
2	2.9	Friction Bearing	C-233-1

PROPRIETARY INFORMATION

All information and technical data closed herein are the property of MT-Propeller Entwicklung GmbH and are not to be duplicated or disclosed to others for any purpose without the written consent of MT-Propeller Entwicklung GmbH, D-94348 Atting, Germany

MT—Propeller
Entwicklung GmbH
Propellerplatz 1
D—94348 Atting

Freimasstoleranzen: ± 0,2 mm
Gewicht:
Masstab: 1:1

MTV-28-( )

	Datum	Name
2017		
Bearb.	31.05.	Grum
Gepr.		
Norm		

Spacer Actuator compl.

Zust.	Aenderung	Datum	Name
C	aktualisiert	05.03.20	D.G.
B	Gehäuse geän.	13.02.19	D.G.
A	Fitting geän.	23.01.19	D.G.
--	Design	17.05.18	F.G

Werkstoff:

Rohteil:

P-1586-C

Rev. C

Blatt

Bl.

5.5. **Adjusting**

Mechanical high pitch stops and reverse stops are adjusted during manufacturing, according to the requirement of the engine / application.
Hydraulic low pitch can only be adjusted via the beta rod setup.

5.5.1. **Setting the Low Pitch**

Set the low pitch blade angle with the electric actuator and due to moving the beta rod in or out as well as fine adjusting with the threaded beta rod end

Moving out: Higher pitch
Moving in: Lower pitch

The beta rod is secured by a safety nut to the electric actuator.

5.5.2. **Setting to ensure that the complete travel of the blade angle is given:**

- Use the electric actuator to bring the blades to full reverse position until the blades stop moving. Check blade angle -35° ±2°
- Then use the electric actuator to bring the blades to the high pitch stop until the blades stop moving and again check blade angle +40° ±2°
- To minimize internal leakage, use the adjusting rod to move the beta tube additional 2 mm (0.08 in) out of the adjusting unit.
  Neutral pitch at a blade angle of -2° need to be determined by actuator setting afterwards.

Throttle position	**Pitch °**	**mm of Beta rod travel**
Full Forward (beta rod all the way out of hub)	+40°	-38.5 mm
Neutral	-2°	0 mm
Full Aft (beta rod all the way in hub)	-35°	+34.5 mm

Table 1: Blade pitch in comparison to beta rod travel

5.6. **After first runs, check for oil leaks and blade shake.**

Check for any movement of the blade in the outer ferrule with the help of the indication markings.
NO MOVEMENT OF THE BLADES IS ALLOWED.

5.7. **Perform test run in accordance with the description in the hovercraft operation manual.**

5.8. **Operation**

Propeller, beta tube and electric actuator are selected as a result of tests.
The beta tube allows a direct blade angle feedback but no constant speed operation. Overspeed protection must be provided by the engine control.
In case of failure of oil pressure, the propeller automatically goes into low pitch / reverse position.

6. INSPECTIONS

6.1. Pre-operation inspection

Before each operation of the propeller inspect the condition of the blades and spinner:

Optionally the pre-operation inspection can be replaced with a post-operation inspection. The inspection content remains the same for pre- and post-operation inspection.

- The inspection is valid for 24 hours if the Hovercraft is in operation.
- The inspection is valid for 48 hours if the Hovercraft is not in operation

No blade shake is allowed!

No critical cracks are allowed in the blades.

Metal erosion sheath is not allowed to be loose.

PU-strip must be properly attached. If not, replace within the next 2 hours after last inspection.

No oil leakage is allowed.

NOTE: POSSIBLE GREASE LEAK ON BLADE SURFACE:

The first run-up of a new or overhauled propeller may leave grease on the blades and inner surface of the spinner dome.
This is normal and does not imply a continuing grease leakage.
Remove any grease on the blades or inner surface of the spinner dome by using a mild solvent.
Minor grease leak which can be seen on one or all blade root(s) and spinner should be monitored if it gets worse.
If the grease leak does not spray more than 180 mm (7 in) on the blade surface from the blade root outside the blade ferrule in 5 hours of operation, it is defined as minor and should be only monitored!
Continued grease leakage after 20 hours of operation from first leakage requires repair at an authorized service repair facility within 5 operating hours

In case of doubt, contact manufacturer.

6.2. 100 Hours Inspection

Hub access can be achieved by removing the spinner screws of rear, mid and front spinner support plate and additionally all screws of the connecting plates between each spinner dome segment.

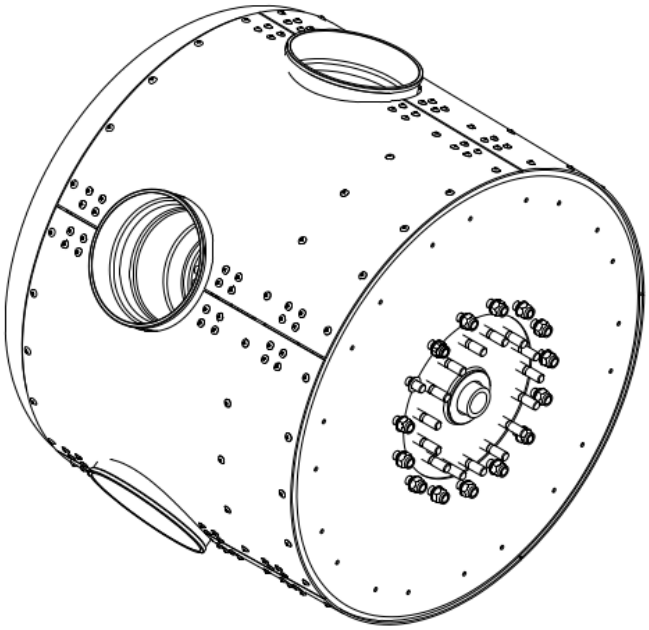

Figure 12: Hub Access

Check for cracks and blade shake.

No blade shake at all is allowed!

NOTE: CHECK THE BLADE SHAKE IN FLIGHT DIRECTION AND OPPOSITE FLIGHT DIRECTION. CHECK THE BLADE SHAKE IN CHORD DIRECTION, SEE FIGURE 13.

Figure 13: Blade shake check direction

Check the relative movement of the blade preload nut to the hub during the blade shake test.
No visible play is allowed!
If the check shows results not complying with these requirements contact the service department of MT-Propeller.
Inspect the visible condition of the hub and parts for cracks, corrosion or deterioration.
Check all safety means to be intact.
Check front and rear spinner plate for cracks and fixing.
Inspect blade root and hub for oil and grease leaks.
Check position of counterweights.
Check blades for any rotation in the outer ferrule and the correct position of the anti-rotation pin.
No rotation is allowed!

In case a blade has moved, loosen stop nut and turn blade back to original position, respecting the index markings.

The propeller comes with a preloaded bearing which can be greased by means of 3 grease fittings which are installed on the preload nut.

A re-greasing of the bearing is required either every 300 operation hours or 6 months of service, whatever expires first.

Procedure:
Remove 1 of the 3 grease fittings.
Pump MT2 - Propeller grease into the 2 remaining grease fittings until fresh yellow grease is leaking out from the void where the grease fitting has been removed, see Figure 14.
After completion of the re-greasing re-install the removed grease fitting.
Thus, a sufficient amount of grease is ensured so corrosion cannot damage the preload bearing.

Figure 14: Removal of one grease fitting and application of grease

Adjusting unit and beta rod
Check for corrosion on adjusting unit and beta rod.
In case corrosion is found, remove corrosion by polishing with abrasive paper and apply sticky grease every 100 operating hours to avoid further corrosion.

6.2.1. **Check the blades for cracks in the carbon fiber cover and blade erosion sheath.**
Only certain cracks are allowed.

Cracks along the leading edge and on the beginning of the erosion sheath area are allowed as long as the erosion sheath is not loose.
Cracks in the painted surface are allowed as long as no moisture can enter the blade core. Blisters or delaminations up to 645 mm² (1 in²) are permissible.
In case of questionable conditions please contact the service department of MT-Propeller.
Also see Service Letter SL-32 and SL-32-2.

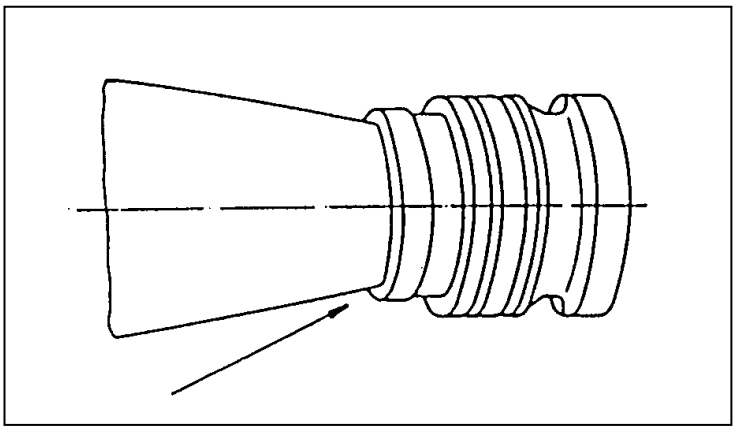

Figure 15: black sealer between the blade and ferrule

Check that the black sealer which is sealing the blade with the inner ferrule is not damaged, see Figure 15. If a damaged seal is obvious it has to be repaired acc. to Service Letter SL-32 in order no moisture can intrude the blade body and ferrule.
Perform a visual inspection in case notches, dents, nicks or other damages are present on the blade body, e.g. stone nicks.

For repair see Service Letters SL-32 and SL-32-2.

Attention:
The aerodynamic properties of the airfoil must not be disturbed when performing a repair.

Apply a layer of lacquer to protect the repaired spot against moisture.
Check this particular area carefully for possible cracks in each inspection prior to propeller operation.
The area will be inspected and repaired by propeller specialists during next repair or overhaul at the manufacturer or service station.

Damages on erosion protection sheaths are not allowed beyond the restrictions of Service Letters SL-32 and SL-32-2.

6.3. Special Inspections

Kind and extent of a special inspection are shown in the propeller log book. In case of questions consult MT-Propeller.

6.4. Overhaul

The time between overhauls is expressed in hours flown and calendar months since manufacture or overhaul. The figures are presented in Service Bulletin No. 1( ), latest revision. They are also shown in the propeller log book. In any case, a calendar time inspection must be performed after a maximum of 60 months from installation, if no more than 24 months have passed since manufacturing overhaul when properly stored. This means that calendar TBO can be max. 84 months. The extent of the overhaul and the replacement of life-limited parts is defined in the applicable service manual.

6.5. Overspeed / Overtorque

When a propeller has an overspeed event refer to the engine overspeed limits (Figure 16) to determine the corrective action to be taken.

In case an overspeed inspection or overhaul due to overspeed is required also engine mounted accessories manufactured by MT-Propeller (e.g. governor, pump, propeller control unit) need to be disassembled in order to be inspected in accordance with the applicable maintenance manual.

Regardless of the degree of damage a log book entry is required to document the overspeed incident.

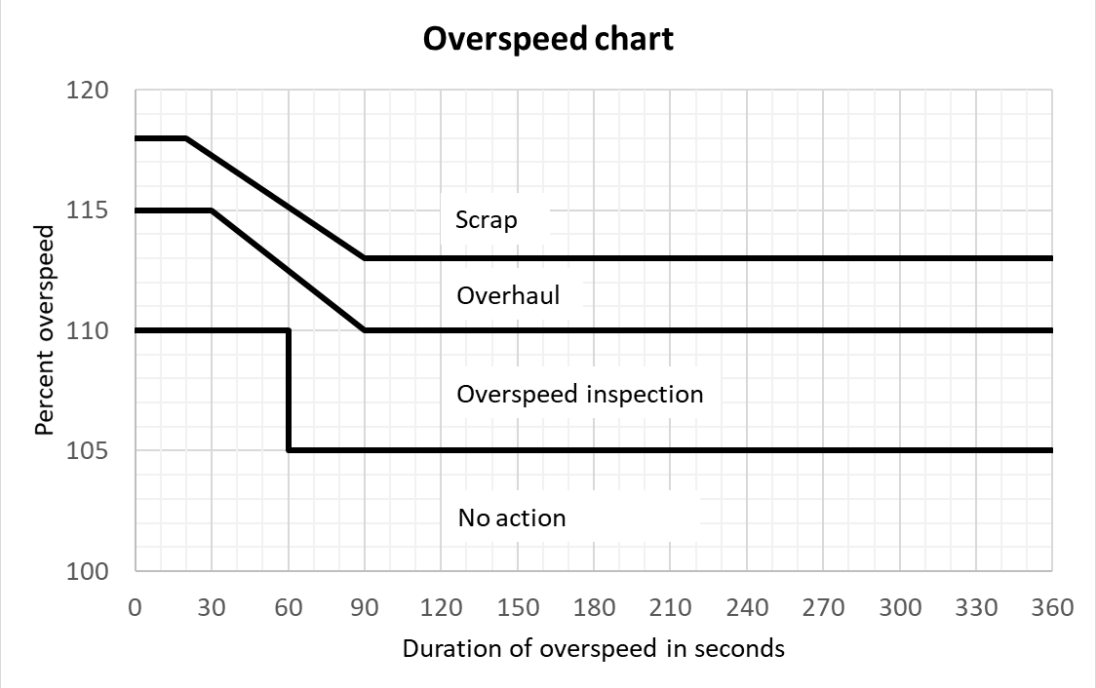

Figure 16: Overspeed chart

The corrective action is based on the severity and the duration of an overspeed for a single event.

6.5.1. No Action Necessary

In case no action due to overspeed is necessary also no maintenance is required.
However, it has to be verified that the overspeed incident is not caused by a mechanical issue of the propeller.

6.5.2. Overspeed Inspection

An overspeed inspection requires the disassembly of the propeller in accordance with the appropriate propeller overhaul manual and performance of the following inspections:

General
Visually inspect for signs of abnormal wear and/or damage.
Evidence of wear and/or damage should be further evaluated using the inspection criteria from the appropriate propeller or blade overhaul manual.
Special attention must be given to blade retention components.

Aluminum Hub
Visually inspect the blade retention area of the blade socket.

Composite Blades
Perform a thorough visual and coin tap inspection (see Figure 17) of the exposed portion of each blade including the stainless-steel leading edge.

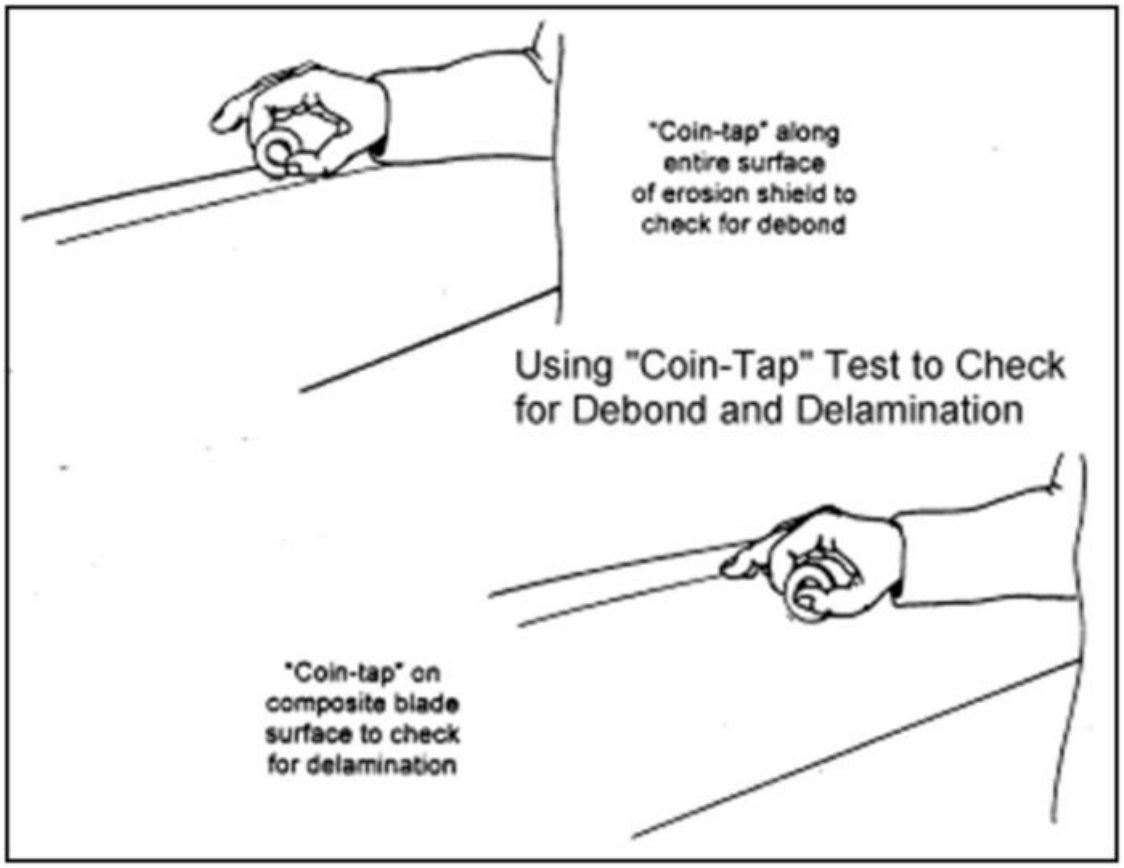

Figure 17: Coin tab test for composite blades

6.5.3. Overhaul

In case an overhaul inspection is required as corrective action for an overspeed the propeller needs to be overhauled in accordance with the appropriate overhaul manual.

Attention:
In case the blade has been damaged by a foreign object an overhaul is always required.

6.5.4. Scrap

In case the corrective action requires scrapping the propeller, the propeller is no further airworthy and must be put out of service.

6.6. Special Corrosion Inspection and Treatment

Inspect the painted aluminum surfaces for corrosion. Remove the corrosion with an oily rag or similar; afterwards apply protective grease for lubrication.
Also inspect the counterweight assembly for corrosion, remove it the same way and re-grease.

Frequently inspect areas prone to corrosion, remove the corrosion and re-grease as applicable.

In case of doubts regarding corrosion please send pictures of the affected areas to the technical support of MT-Propeller (techsupport@mt-propeller.com) for information and evaluation.

NOTE: IN CASE THE PROPELLER IS MAINTAINED AND INSPECTED ACCORDING TO THIS CHAPTER 6 THE TBO IS NOT AFFECTED.

NOTE: ALL INFORMATION IN THIS MANUAL ARE IN ACCORDANCE WITH SERVICE LETTERS SL-32 AND SL32-2.
IN CASE OF AMBIGUOUS INFORMATION, THE SL-32 AND SL-32-2 OVERRULES THE INFORMATION IN THIS MANUAL.

7. MAINTENANCE

7.1. There is no special maintenance schedule for these propellers beyond the usual inspections as per chapter 6. For the repair of minor damages in the blade surface and edges, automotive material such as PU or Acryl paint and Epoxy resin can be used, see service letter SL-32 and SL-32-2.

The preload bearing needs to be re-greased every 300 hours of service or once every 6 months (whatever expires first).

It is highly recommended to clean the propeller system at least once a day with freshwater (e.g. with a common hose) before the Hovercraft is parked for a longer time, e.g. over night. Thus, corrosion can be reduced effectively.

Polyurethane / epoxy lacquer is used for surface finish on the propeller blades. Since the coating is highly resistant to most of solvents the blades can be cleaned with usual car cleaning agents and polish. During cleaning it needs to be ensured that no moisture is intruding the wooden core of the blade. Contact an aircraft inspector for a final decision concerning the need of repair if necessary. In case the repair is performed locally consider and respect curing times of resin and paint.

Besides the maintenance actions described in this manual no further frequent maintenance is required on the hub since all moving parts are located inside the hub and are not exposed to the environment. The hub is filled with 10 l (2.6 gal) HLP 100 oil for lubrication which does not need to be refilled. In the hub two oil filler bores provide the possibility to check and refill oil. To check the oil level, position the hub in a way that one bore is located in the uppermost position; then open the bore by removing the plug 2.64. turn the hub carefully in one direction and monitor when oil starts to drip out of the bore. Measure the angle of the bore against vertical direction. As reference an angle of approx. 60° to the vertical axis correspond to an oil amount of 10 l (2.6 gal), an angle of approx. 90° to the vertical axis correspond to a minimum oil level of 6 l (1.6 gal), see Figure 18.

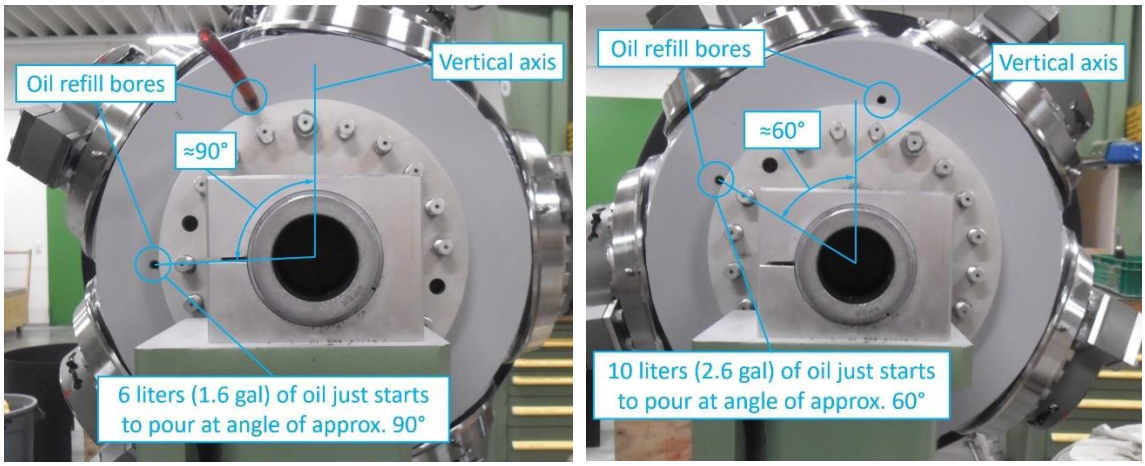

Figure 18: Determination of oil level

It is recommended to check oil level each 300 hours.

Attention: Maximum oil volume in the hub must not exceed 10 liters (2.6 gal).

Corrosion protection of the hub's outer surfaces is accomplished by special anti-corrosion paint Sherwin-Williams JET GLO Express painting, RAL7004 Grey. Re-apply if missing.

A repair of spinner parts is not permissible. Cracked spinner domes and backplates need to be replaced by airworthy parts.

Broken blade tips and damaged composite blades can be repaired by the manufacturer if a minimum of 85 % of the blade remains without cracks. For damages on the leading and trailing edges see Service Letters SL-32 and SL-32-2
In case of doubt send the affected hub as well as the broken blades to the manufacturer for evaluation.

7.2. Dynamic balance

7.2.1. Overview
Dynamic balance is accomplished by measuring the amount and location of the dynamic imbalance, using accurate means of measuring.
After the balancing the remaining imbalance should be lower than 0.2 ips.
Follow the instructions from the equipment manufacturers for dynamic balance.
If the dynamic imbalance is larger than 1.2 ips, the propeller must be removed from the hovercraft and a static rebalancing needs to be performed.

7.2.2. Inspection procedures prior to balancing
Check blade position and fit in the outer ferrule. No movement is allowed, otherwise see chapter 5.3.1.

7.2.3. Visually inspect the propeller assembly after it has been reinstalled on the aircraft prior to dynamic balancing.

NOTE: POSSIBLE GREASE LEAKS ON PROPELLER SURFACE:

The first run-up of a new or overhauled propeller may leave grease on the blades and inner surface of the spinner dome.
This is normal and does not imply a continuing grease leakage.
Remove any grease on the blades or inner surface of the spinner dome by using a mild solvent.
Minor grease leak which can be seen on one or all blade root(s) and spinner should be monitored if it gets worse.
If the grease leak does not spray more than 18 cm (7 in) on the blade surface from the blade root outside the blade ferrule in 5 hours of operation, it is defined as minor and should be only monitored!
Continued grease leakage after 20 hours of operation from first leakage requires repair at an authorized service repair facility within 5 operating hours

In case of doubt, contact manufacturer.

7.2.4. Prior to dynamic balance record the number and location of all balance weights form static balancing.

7.2.5. Place the balance weights in radial direction onto the carbon fiber mid support plate 3.11. Use the designated holes for attachment. If required the rear support plate 3.3 can be used, too.

7.2.6. Use weights B-486 or similar for balancing. Drilling additional holes for balancing is acceptable.

NOTE: CHADWICK-HELMUTH MANUAL AW-9511-2, „THE SMOOTH PROPELLER" SPECIFIES SEVERAL GENERIC BULKHEAD REWORK PROCEDURES.

7.2.7. Ensure that the balance weights and attachment parts do not interfere with the adjacent airframe and engine or propeller components!

7.2.8. Placement of balance weights for dynamic balance.

7.2.9. The attachment location for static and dynamic balance weights is the mid support plate 3.11 and the rear support plate 3.3.

7.2.10. The removal of the dynamic balance weights, if they exist, will restore the propeller to its original static balance condition. A removal of the static balance weights is only allowed in exceptional cases.

7.2.11. As dynamic balance weights on the front plate use B-486 or similar.

7.2.12. Maximum balance weight capacity per location must not exceed 180 g.

7.2.13. Weights are to be installed using aircraft quality 1/4''-28 bolts.

7.2.14. Balance weight screws attached to the spinner support plates must protrude through the self-locking nuts a minimum of one thread and a maximum of four threads.

7.2.15. All propellers which have been dynamically balanced must be labeled with a decal on blade no. 1 to inform service station personnel that the existing balance weight configuration may not be correct for static balance.

7.2.16. Register number and location of static and dynamic balance weights in the propeller logbook if they have been reconfigured.

7.3. Prevention of erosion caused by sea water intrusion

Installation of boots on hovercraft blades for protection against erosion caused by sea water as technical approvement.

The CRRD358-160 blades are covered with boots on the blade root before the nickel erosion protection sheath.

Figure 19: Blade with boots in root area

The installation procedure of the boots is described in the E-1290 manual, section boots.

PROPRIETARY INFORMATION

All information and technical data closed herein are the property of MT-Propeller Entwicklung GmbH and are not to be duplicated or disclosed to others for any purpose without the written consent of MT-Propeller Entwicklung GmbH, D-94348 Atting, Germany

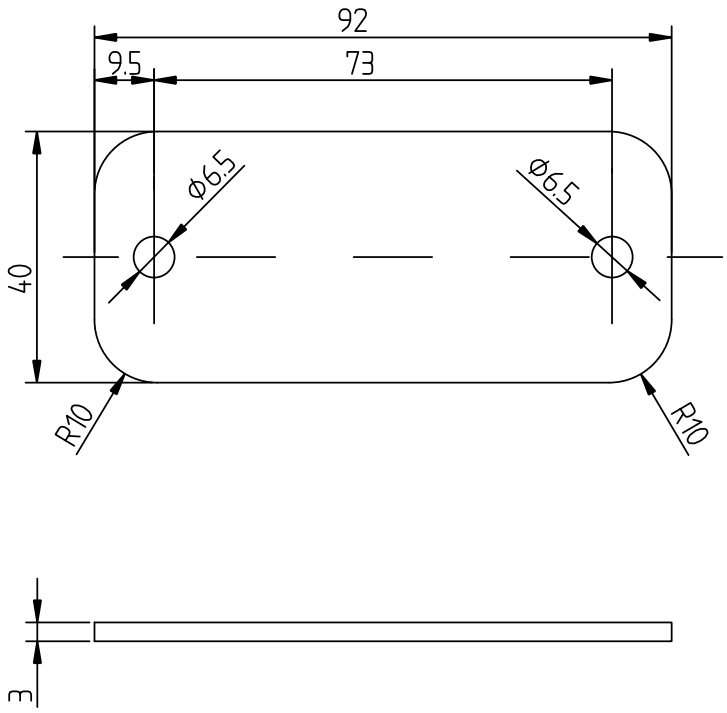

Kanten gebrochen! $\sqrt{R_z 6.3}$

MT—Propeller Entwicklung GmbH Flugplatzstrasse 1 D-94348 Atting	Freimasstoleranzen: ± 0,2 mm	Gewicht:	Masstab: 1:1
			MTV-28-( )
	2005 Datum / Bearb. 27.06. / Gepr. / Norm		Name: Grum
			Wuchtgewicht — Rev. —
	Werkstoff: Stahl rostfrei		B-486 — Blatt Bl.
Zust. Aenderung Datum Name	Rohteil:		

Figure 20: balance weight B-486

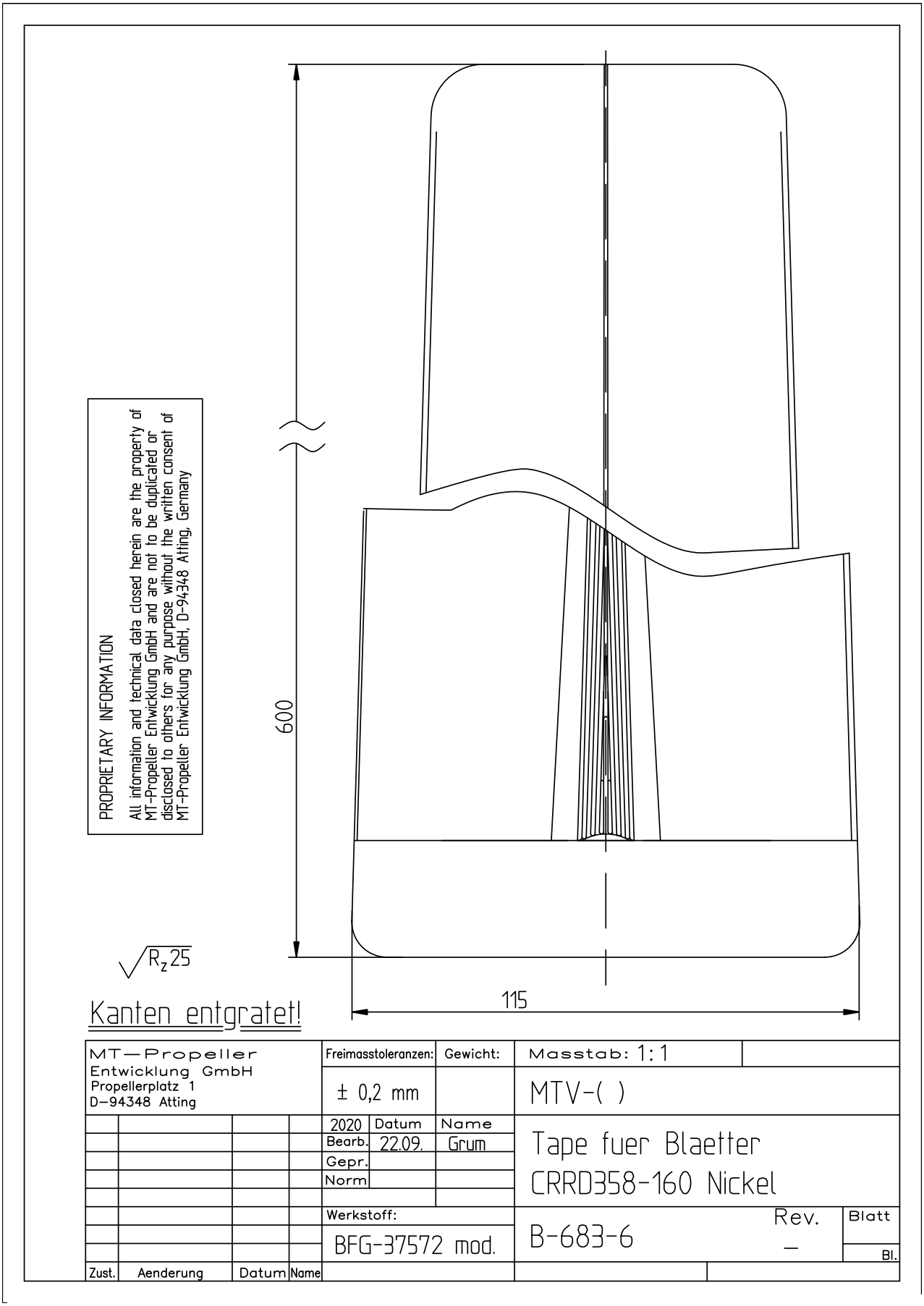

Figure 21: Boot B-683-6

7.4. Repainting of blade surface for cosmetic reasons

After high erosion operation paint on blade surface might be eroded on certain areas:

List of consumables and materials:

- Polane T F63TXA00128 or similar Polyurethane or Epoxy based paint
- Coloradol, MEK (Methyl Ethyl Ketone) or Acetone
- Paint brush or similar (Please make sure to use a high-quality brush with a width of 5 cm or broader, which does not lose bristles.)
- Classic paint roller (Moltoprene / PU-foam roller or similar)
- Epoxy Adhesive: 3M Scotch-Weld™ DP110 Translucent
- Epoxy Adhesive: Loctite EA 9330 AERO (known as Hysol EA 9330)

Work instruction for repainting:

1. Mix the paint WITHOUT thinner
2. Use a scale to verify the amount of paint in the cup
3. Wait 30 minutes for optimum consistency
4. Degrease blade surface with Coloradol, MEK or Acetone
5. Apply first coat of paint with a brush
6. Let the first coat of paint dry, until it gets slightly sticky
7. Apply second coat of paint with a roller (“wet-in-wet”)
8. After the final coat, measure the amount of paint in the cup again, to calculate the used weight of paint on the blades
9. Repeat the previous steps and apply the same amount of paint to the same location in relation to the blade radius onto the other blades to avoid an imbalance.
10. Let it dry according to paint manufacturer’s instructions

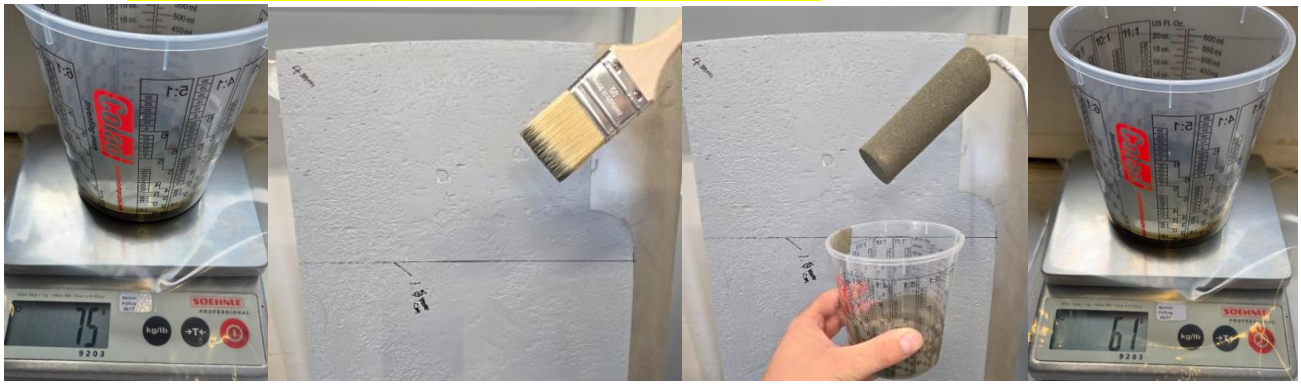

Attn: In case the paint/epoxy is not applied uniformly on all blades, an imbalance may occur

8. TROUBLE SHOOTING

8.1. Blade shake in FWD and AFT direction

Cause: Blade bearing loose

Remedy: No movement at all is allowed on MTV-28-2-AZ-R(H). In case of movement return propeller to the manufacturer or any approved repair station.

8.2. Sluggish RPM change

Cause:
1. Cold oil
2. Excessive friction

Remedy:
1. Run the system until a sufficient the oil temperature is reached (green arc).
2. Move blades with the electric actuator from reverse to full forward and measure the time to achieve this motion. Check whether the electric actuator is moving synchronal. If excessive friction is observed or the blades move asynchronously to the electric actuator, the blade retention system needs to be inspected. Contact manufacturer.

8.3. Surging RPM

Cause:
1. Residual oil
2. Abrupt movement of propeller or throttle control
3. Instrumental error

Remedy:
1. Clean oil tubes in the propeller piston and eventually in the beta valve and beta tube
2. Move the controls carefully and slowly.
3. Check tachometer and drive.

8.4. RPM increase during normal operation without change of propeller lever position

Cause:
1. Oil leakage or hot oil
2. Worn oil transfer system on the beta-tube causes an decrease in blade angle.
3. Supply pressure failure.

Remedy:
1. Check for oil leaks, replace gaskets, decrease oil temperature.
2. If the system works with cold oil and fails at high oil temperature, this is an indication for high leakage in the oil transfer system in the beta-valve. Replace beta tube.
3. Check pump drive on the test bench.

8.5. Extremely slow pitch change or no pitch change on ground

Cause:
1. Blocked oil line.
2. Residual oil in propeller piston.
3. Damaged pitch change mechanism.
4. Corrosion in the blade bearings.

Remedy:
1. Check beta tube and the electric actuator
2. Clean beta tube oil lines
   NOTE: THIS BEHAVIOR DOES NOT APPEAR AT ONCE AND GETS WORSE OVER TIME. IT SHOULD BE OBSERVED.
3. Contact manufacturer.
4. Repair propeller.

8.6. Oil leakage (visible outside or hidden inside)

Cause: Damaged seals

Remedy: Replace gaskets or repair propeller.

8.7. Rough running engine / propeller, possibly in limited RPM range only

Cause:
1. Bad static balance.
2. Bad dynamic balance.
3. Rotation of blade in outer blade ferrule

Remedy:
1. Rebalance statically.
2. Rebalance dynamically.
3. Check marking whether blade is rotated in outer blade ferrule.
   If applicable, reset according to chapter 5.

9. SHIPPING AND STORAGE

9.1. For any shipment of the propeller use original container. If this is not possible it is mandatory to fix the propeller at the blades and the hub in a way to avoid damage during transport.

Furthermore it is recommended to return all accessories and parts together with the propeller when returning the propeller. These will also be inspected and thus not considered to be missing.

Attention:
After removal of blades do not torque counterweights, just tighten them lose and fix with a ty-rap to avoid movement.
By this no bending of the inner blade ferrule and therefore irreparable damage can occur.

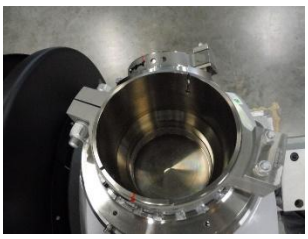

9.2. If the propeller is stored for a longer period of time, preferably use the original container or an equivalent container. Store it only in a controlled environment (temperature - 5° F to 95° F, rel. humidity 10 % to 75 %). Avoid extreme temperature/humidity differences or cycles. All metal surfaces should have anti-corrosion protection which is easy to remove. There is no need for additional blade protection since its lacquer is sufficient.

9.3. The TBO starts with the installation on the aircraft.
However, if the installation is later than 24 months after new assembly or overhaul and proper storage provided, the TBO automatically starts after this 24 months, up to maximal 84 months of calendar time.

9.4. In case the propeller is stored for longer than 24 months it can be disassembled before installing it onto the aircraft and all seals have to be replaced. This will bring calendar time TBO back to zero.

9.5. Long-term storage could require additional preservation. All standard anti-corrosive preservation oils may be used if they do not affect the seals. Only metal parts need to be protected. The wood-composite blades do not need special protection but mechanical damage has to be avoided in order no moisture is allowed to enter the wooden blade core.

9.6. If the propeller is stored or transported in corrosive environment such as salt water or fog, it is recommended to cover the visible outside surfaces of the metal parts with a film of thinned engine oil.

9.7. If the propeller is delivered in a wooden shipping box, the shipping box must be opened after receipt. By opening the shipping box it is ensured that the chemically treated wood of the shipping box does not create any corrosion on the metal parts of the propeller.

9.8. **Acceptance Check**

Examine the exterior of the shipping container for signs of shipping damage, especially at the box ends around each blade.
A hole, tear or crushed appearance at the end of the box (at the propeller tips) may indicate the propeller was dropped during shipment, possibly damaging the blades.
After removing the propeller from the shipping container, examine the propeller components for shipping damage.

9.9. **Uncrating:**

Place the propeller on a firm support.
Remove the banding and any external wood bracing from the cardboard shipping container.

CAUTION:
Never place the propeller onto a blade tip!

Put the propeller on a padded support that supports the entire length of the propeller.

If applicable, remove the plastic dust cover cap from the propeller mounting flange.

9.10. **Lifting**

To lift the propeller, pick up the propeller at the blade ferrule as close as possible towards the hub.
Do not pick up the propeller on any other spot, especially not on the blade tips as well as the spinner front plate or back plate.

10. SPECIAL TOOLS

None

11. PART LIST

Item	QTY	Part	Part number	Item	QTY	Part	Part number
2.16	45	Stop Nut ½''	C-067-9	3.7	25	Washer	C-344
2.44	18	Washer	C-077-9	3.8	25	Spinner screw	C-306-8
2.45	18	Stop nut 9/16''	C-066-9	3.9	12	Screw	C-304-5*9
2.50	5	O-Ring	C-049-140	6.1	5	Screw	C-381-3,5-9
2.59	15	Washer	C-076	6.3	5	Stop nut	C-382-9
2.64	2	Plug	C-293-1/8	6.6	10	Screw	C-304-25-9
2.65	1	O-Ring	C-050-76	6.7	20	Washer	C-336-5-9
				6.8	10	Stop nut	C-324-524-9
				6.9	5	Anti-rotation pin	C-166

12. PROPELLER DRAWING
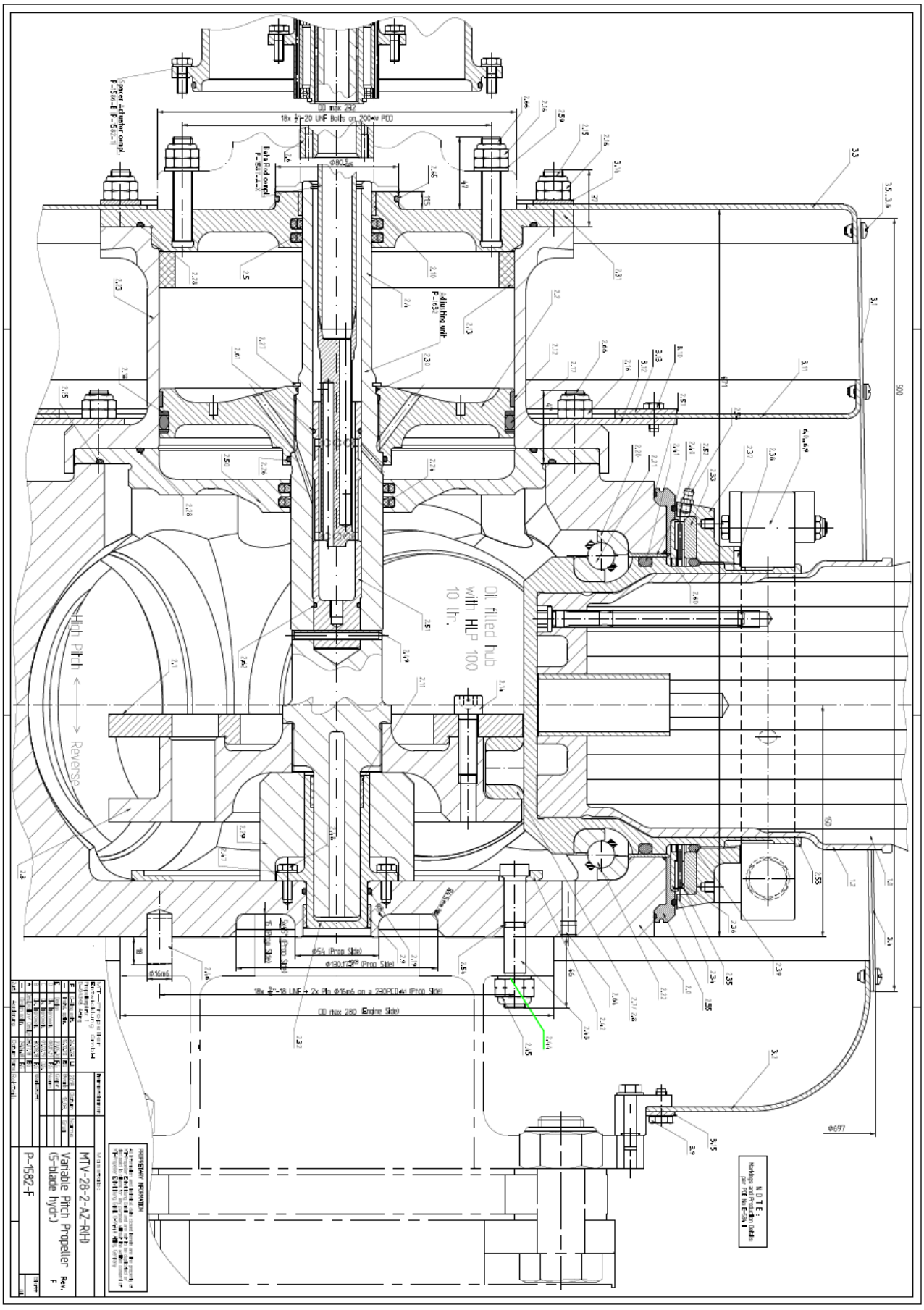
MTV-28-2-AZ-R(H)
Drawing No. P-1582